1A Charge+ 3A Synchronous Boost PMIC

General Description

The LP78071 is a PMIC , which has 1ch Charger and 1ch Synchronous Boost Converter with ESOP-8 and TDFN10 package.

Its charger is a complete constant-current constant voltage linear charger for single cell lithium-ion batteries. Furthermore, the LP78071 is specifically designed to work within USB power specifications. No external sense resistor is needed, and no blocking diode is required due to the internal MOSFET architecture. Thermal feedback regulates the charge current to limit the die temperature during high power operation or high ambient temperature. The charge voltage is fixed at 4.2V, and the charge current can be ISET rammed externally with a single resistor. The charger automatically terminates the charge cycle when the charge current drops to 1/10th the ISET rammed value after the final float voltage is reached. When the input supply (wall adapter or USB supply) is removed, the LP78071 automatically enters a low current state, dropping the battery drain current to less than 4μA.

Other features include charge current monitor, under voltage lockout, automatic recharge and a status pin to indicate charge termination and the presence of an input voltage.

Boost converter is Synchronous current mode boost DC-DC converter. Its PWM circuitry with built-in 3A Current power MOSFET makes this converter highly power efficiently. Selectable high switching frequency allows faster loop response and easy filtering with a low noise output. The non-inverting input and its error amplifier is connected to an internal 800mV precision reference voltage.

Order Information

LP78071 □ □ □

- F: Pb-Free
- Package Type
  - SP: ESOP-8
  - QV:TDFN-10

Features

- Charger:
  - Programmable Charge Current Up to 1000mA
  - No MOSFET, Sense Resistor or Blocking Diode Required
  - Constant-Current/Constant-Voltage Operation with Thermal Regulation to Maximize Charge Rate Without Risk of Overheating
  - Charges Single Cell Li-Ion Batteries Directly from USB Port
  - 8μA Supply Current in Shutdown
  - Drainage Charge Current Thermal Regulation Status Outputs for LED or System Interface
- Boost:
  - 5V/1.2A Output Current @ Vin=3V
  - 1000KHz fixed frequency switching
  - High Switch On Current: 3A
  - Low RDS(ON) Integrated Power Mosfet
  - Efficiency is 94%
- Built-in OVP, OTP, OCP, Soft-Star
- Consumption Available in ESOP-8 Package
- RoHS Compliant and 100% Lead (Pb)-Free

Applications

- MID/Pad
- Power Bank
- Smart Phone
- Bluetooth Applications

Marking Information

Device	Marking	Package	Shipping
LP78071SPF LP78071QVF		SP:ESOP-8 QV:TDFN10	3K/REEL

Functional Pin Description

Package Type	Pin Configurations
ESOP-8 TDFN-10	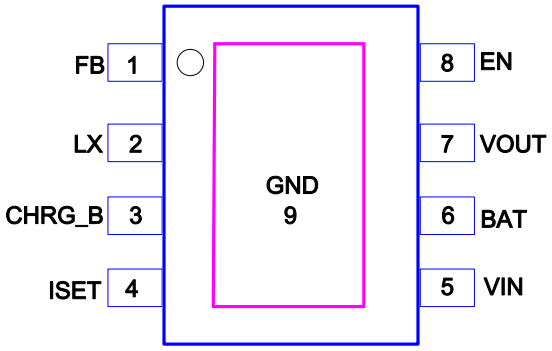 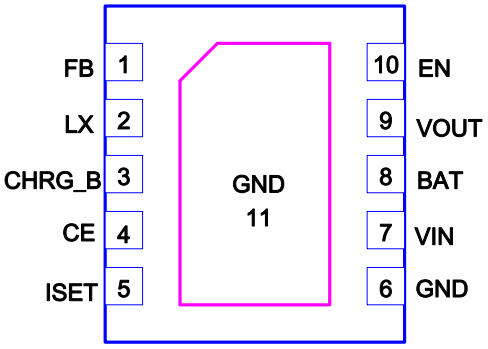

Pin Description

PIN		NAME	DESCRIPTION
TDFN-10	ESOP8		
1	1	FB	Boost Feedback pin. The pin voltage is 0.8V.
2	2	LX	Boost Output switching node. SW is the drain of the internal low-side N-Channel MOSFET and high-side P-Channel MOSFET. Connect the inductor to SW to Complete the step-up converter.
3	3	CHRG_B	Open-Drain Charge Status Output. When the battery is charging, the STAT pin is pulled low by an internal N-channel MOSFET. When the charge cycle is completed, the pin is pulled High.
4		CE	Charge enable pin.
5	4	ISET	Charge Current Program, Charge Current Monitor and Shutdown Pin. The charge current is programmed by connecting a 1% resistor(R_{PROG})to ground. When charging in constant-current mode, this pin servos to 2V. In all modes, the voltage on this pin can be used to measure the charge current using the following formula.LP78071: Iset=1000/R_{PROG}.
6,11	9	GND	Ground Pin.
7	5	Vin	VIN is the input power source. Connect to a wall adapter.
8	6	BAT	BAT is the connection to the battery. Typically a 10μF capacitor.
9	7	VOUT	Output voltage pin.
10	8	EN	Boost enable pin. Active High.

Application Circuit

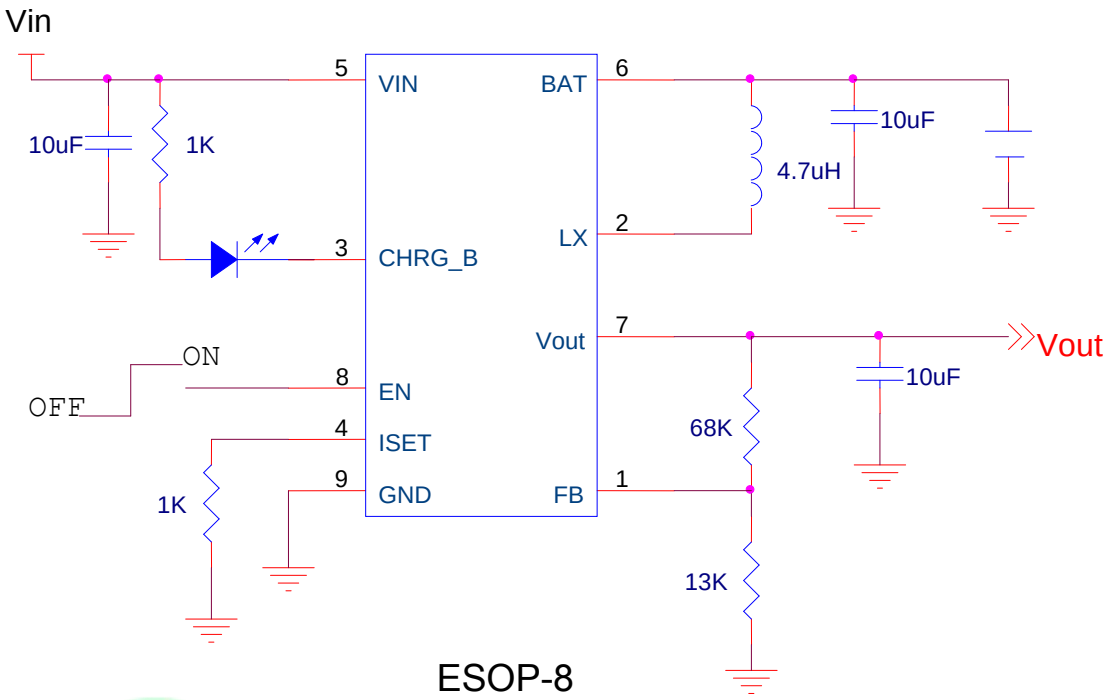

ESOP-8

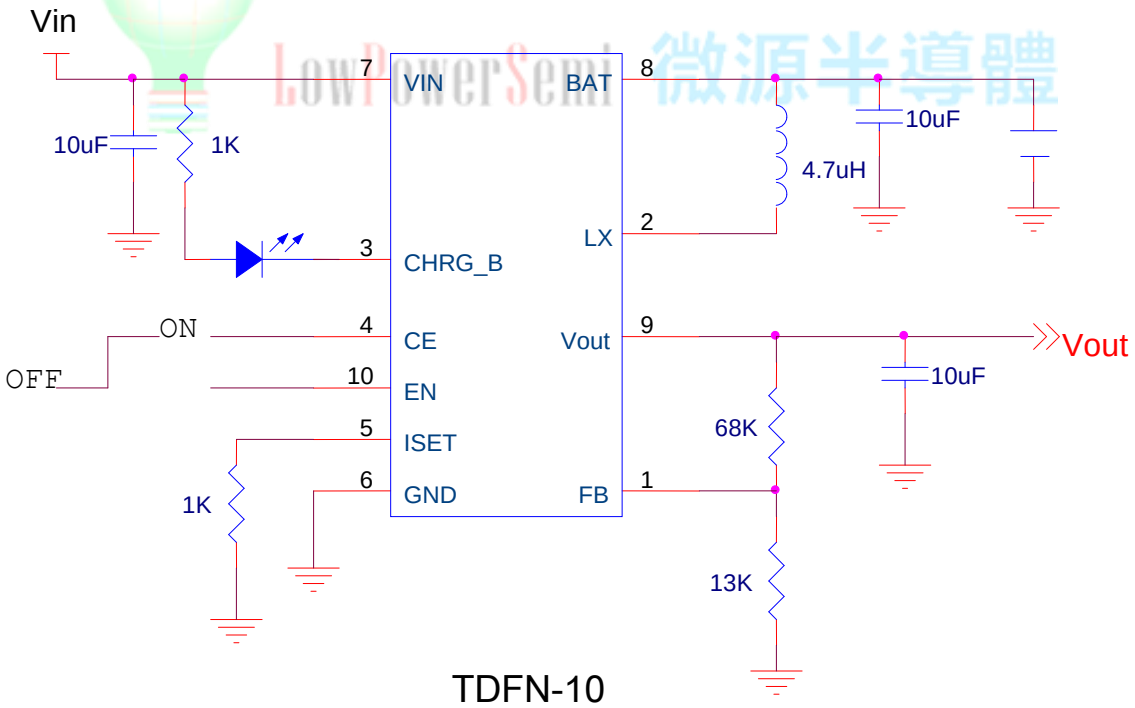

TDFN-10

Function Block Diagram

ESOP-8:

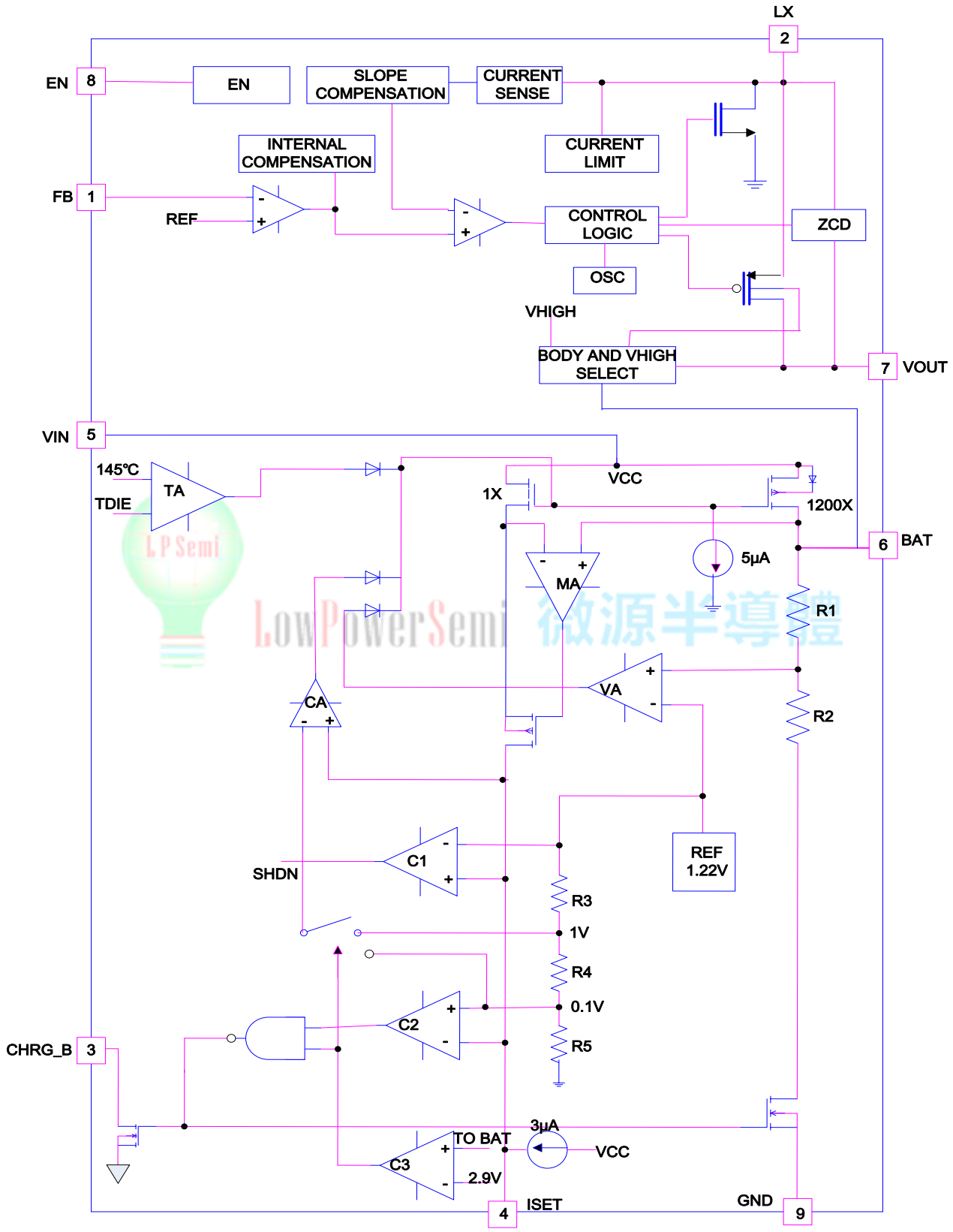

TDFN-10:

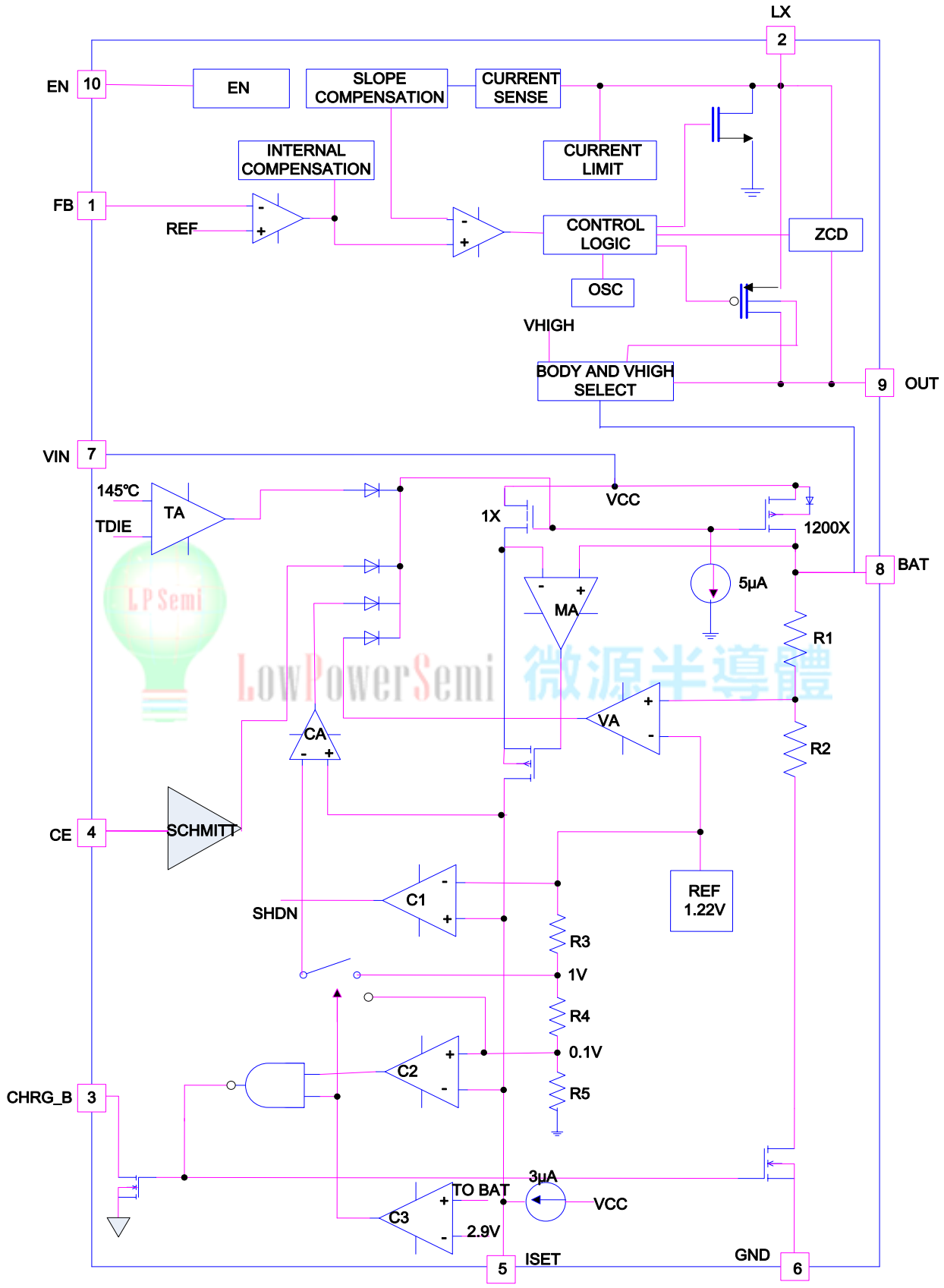
LX
2
EN
10
EN
SLOPE COMPENSATION
CURRENT SENSE
INTERNAL COMPENSATION
CURRENT LIMIT
FB
1
REF
CONTROL LOGIC
ZCD
OSC
VHIGH
BODY AND VHIGH SELECT
9
OUT
VIN
7
145°C
TDIE
TA
VCC
1X
1200X
8
BAT
5μA
MA
R1
VA
CA
R2
CE
4
SCHMITT
C1
REF 1.22V
SHDN
R3
1V
R4
0.1V
C2
R5
CHRG_B
3
3μA
TO BAT
VCC
C3
2.9V
5
ISET
GND
6

Absolute Maximum Ratings

- Input Voltage to GND (VIN) ---------- -0.3V to 6.5V
- VOUT ---------- -0.3V to 6V
- BAT, ISET, STAT, LX, CE, FB, EN ---------- -0.3V to VIN+0.3V
- BAT Short-Circuit Duration ---------- Continuous
- BAT Pin Current ---------- 2000mA
- Maximum Junction Temperature ---------- 125°C
- Operating Ambient Temperature Range (TA) ---------- -40℃ to 85°C
- Maximum Soldering Temperature (at leads, 10 sec) ---------- 260°C
- ESD Susceptibility HBM(Human Body Mode) ---------- 2KV
- MM(Machine Mode) ---------- 200V

Thermal Information

- Maximum Power Dissipation (ESOP8, PD,TA<40°C) ---------- 2W
- Thermal Resistance (ESOP8, JA) ---------- 50℃/W
- Maximum Power Dissipation (TDFN-10, PD,TA<40°C) ---------- 1.5W
- Thermal Resistance (TDFN-10, JA) ---------- 68℃/W

LowPowerSemi 微源半導體

Electrical Characteristics

(TA = 25°C. VCC = 5V, unless otherwise noted.)

SYMBOL	PARAMETER	CONDITIONS	MIN	TYP.	MAX	UNITS
Charge						
VIN	Adapter/USB Voltage Range		3.9	5	6	V
ICC	Input Supply Current	Charge Mode, RISET = 10k		300	2000	uA
		Standby Mode (Charge Terminated)		200	500	
		Shutdown Mode (RISET Not Connected, VCC < VBAT, or VCC < VUV)		25	50	
VFLOAT	Regulated Output (Float) Voltage	0°C ≤ TA ≤ 85°C, IBAT = 40mA	4.158	4.2	4.242	V
IBAT	BAT Pin Current	RISET = 1k, Current Mode		1000		mA
		RISET = 2k, Current Mode		500		
		Standby Mode, VBAT = 4.2V Shutdown Mode (RISET Not Connected) Sleep Mode, VCC = 0V	0	-8 ±8 ±8		uA
ITRIKL	Trickle Charge Current	VBAT < VTRIKL, RISET = 2k		50		mA
VTRIKL	Trickle Charge Threshold Voltage	RISET = 10k, VBAT Rising	2.8	2.9	3.0	V
VTRHYS	Trickle Charge Hysteresis Voltage	RISET = 10k		120		mV
VUV	VCC Under voltage Lockout Threshold	From VCC Low to High		3.9		V
VUVHYS	VCC Under voltage Lockout Hysteresis		150	200	300	mV
VMSD	Manual Shutdown Threshold Voltage	ISET Pin Rising		2		V
VASD	VCC – VBAT Lockout Threshold Voltage	VCC from Low to High	70	100	140	mV
		VCC from High to Low	5	30	50	mV
ITERM	C/10 Termination Current Threshold	RISET = 10k		10		%IBAT
		RISET = 2k		10		%IBAT
VISET	ISET Pin Voltage	RISET = 10k, Current Mode		2		V
VSTAT	STAT Pin Output Low Voltage	ISTAT = 5mA		0.35	0.6	V
ΔVRESTAT	Recharge Battery Threshold Voltage	VFLOAT - VRESTAT	100	150	200	mV
TLIM	Junction Temperature in Constant Temperature Mode				150	°C
RON	Power FET "ON" Resistance (Between VCC and BAT)				300	mΩ
Boost(VBAT=3.5V, Vout=5V, TA=25℃)						
Vout	Output Voltage Range		VIN		5.3	V
UVLO			1.8		2.5	V
Icc	Supply Current	VFB=0.8V,Switch on		300		uA
		EN=0V,Shutdown			8	uA
Vfb			0.784	0.8V	0.816	V
Rds(on)	High-Side P-mosfet			100		mΩ
	Low-Side N-mosfet			80		mΩ
Fosc				1000		KHz
Duty				90		%
V_{ENL}					0.4	V
V_{ENH}			1.5			V
I_{Limit}	Maximum current through SW pin			3		A

Typical Operating Characteristics

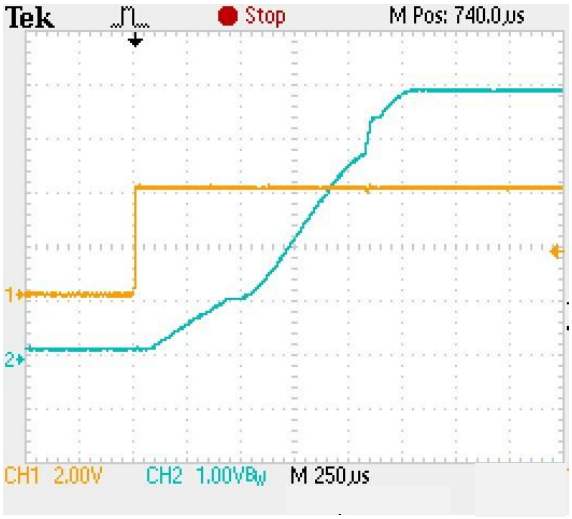

Turn On Through EN

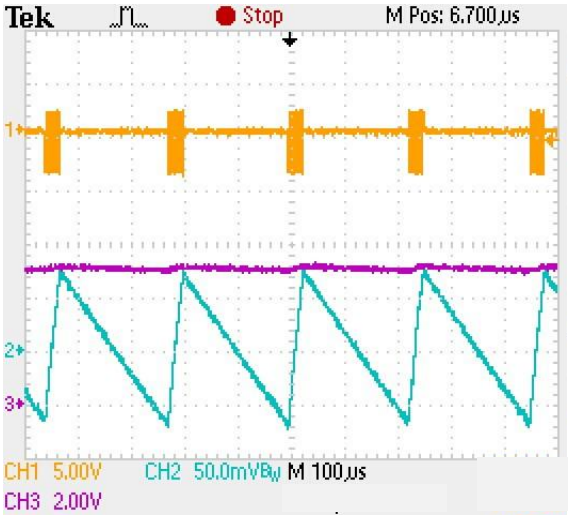

VOUT=5V/30mA

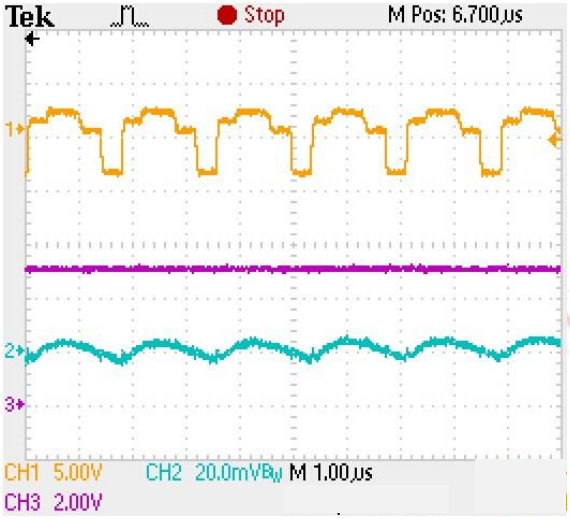

VOUT=5V/120mA

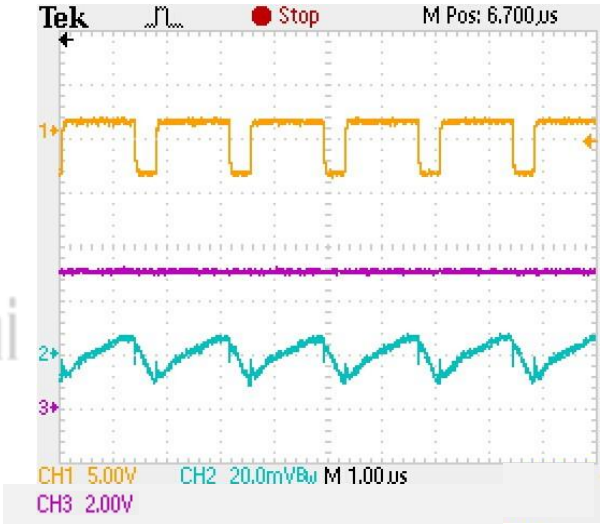

VOUT=5V/600mA

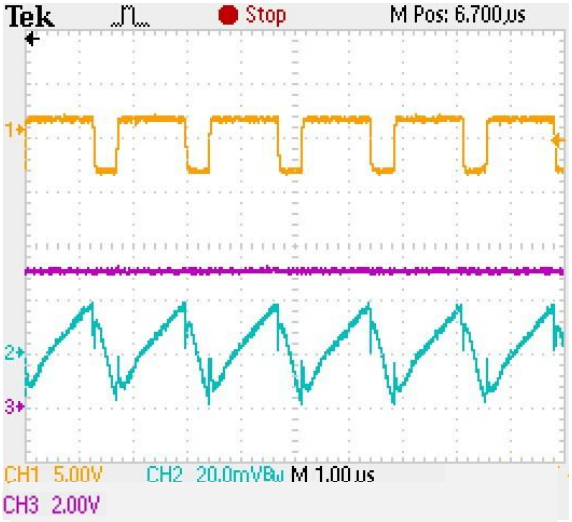

VOUT=5V/1A

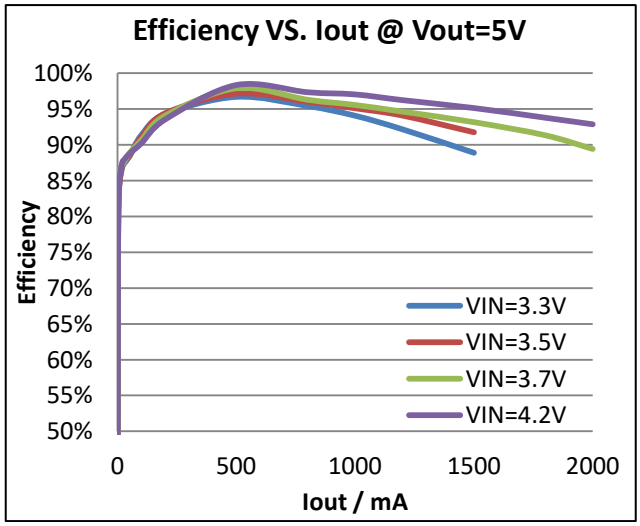

Charge Characteristics

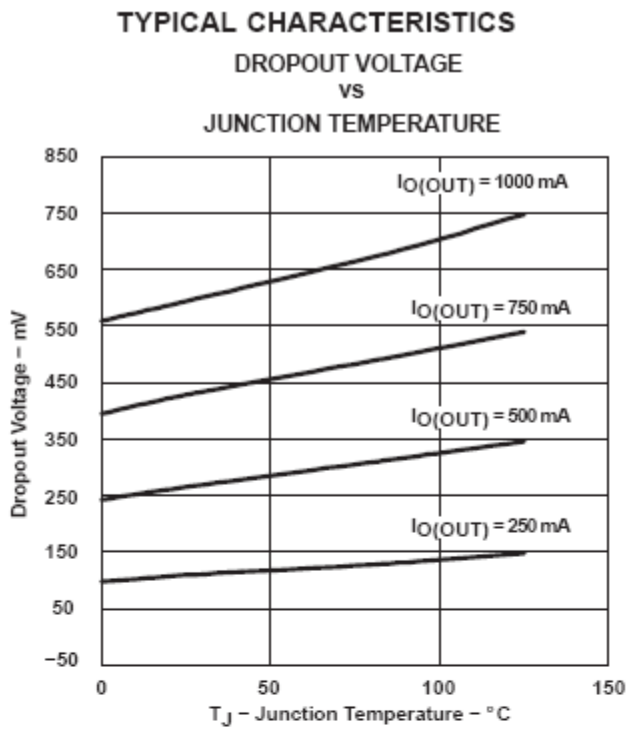

Figure 1

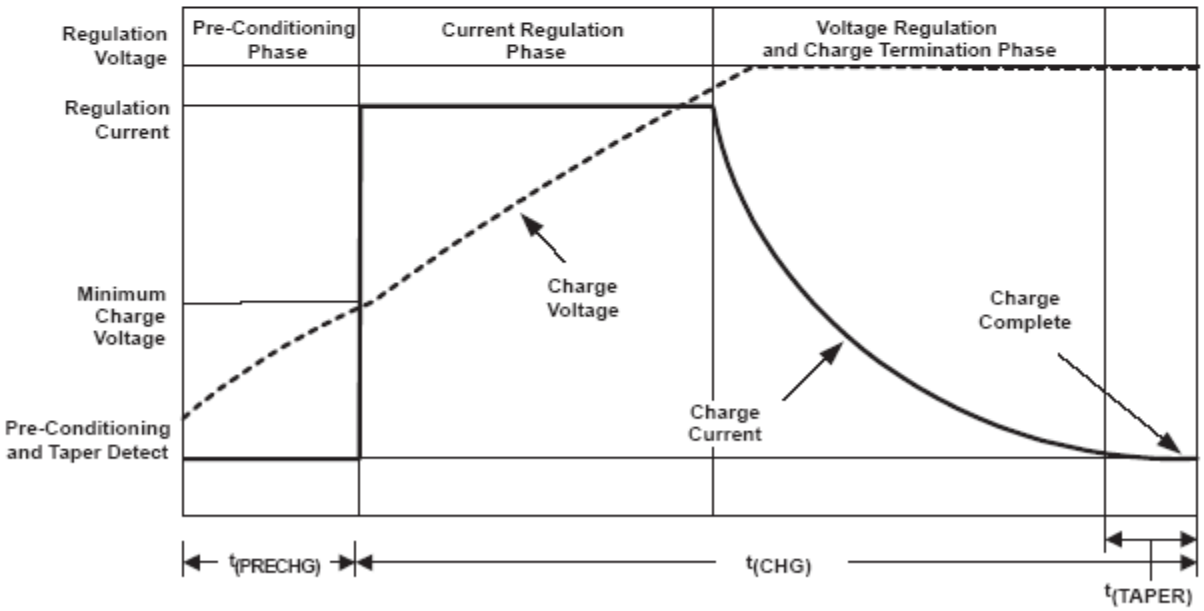

Figure 2. Typical Charging Profile

Application Information

The LP78071 is a single cell lithium-ion battery charger using a constant-current/constant-voltage algorithm. It can deliver up to 1000mA of charge current (using a good thermal PCB layout) with a final float voltage accuracy of ±1%. The LP78071 includes an internal P-channel power MOSFET and thermal regulation circuitry. No blocking diode or external current sense resistor is required; thus, the basic charger circuit requires only two external components. Furthermore, the LP78071 is capable of operating from a USB power source.

For boost function, LP78071will stay in PSM(Pulse Skipping Modulation) mode when there is a light load. This could reduce unnecessary dissipation to promote efficiency. When the load grow to a certain level the boost circuit would turn to PWM mode gradually.

Normal Charge Cycle

A charge cycle begins when the voltage at the V_{CC} pin rises above the UVLO threshold level and a 1% ISET ram resistor is connected from the ISET pin to ground or when a battery is connected to the charger output. If the BAT pin is less than 2.9V, the charger enters trickle charge mode. In this mode, the LP78071 supplies approximately 1/10 the ISET rammed charge current to bring the battery voltage up to a safe level for full current charging.

When the BAT pin voltage rises above 2.9V, the charger enters constant-current mode, where the ISET rammed charge current is supplied to the battery. When the BAT pin approaches the final float voltage (4.2V), the LP78071 enters constant-voltage mode and the charge current begins to decrease. When the charge current drops to 1/10 of the ISET rammed value, the charge cycle ends.

ISET ramming Charge Current

The charge current is ISET rammed using a single resistor from the ISET pin to ground. The battery charge current is 500 times the current out of the ISET pin. The ISET ram resistor and the charge current are calculated using the following equations:

RSET=1000V/ICHG , ICHG= 1000V/RSET

The charge current out of the BAT pin can be determined at any time by monitoring the ISET pin voltage using the following equation:

IBAT= VSET x 500/RSET

Note: Vset is 2Volts.

Charge Termination

When charging, transient loads on the BAT pin can cause the ISET pin to fall below 200mV for short periods of time before the DC charge current has dropped to 1/10th the ISET rammed value. The 1ms filter time (t_{TERM}) on the termination comparator ensures that transient loads of this nature do not result in premature charge cycle termination. Once the average charge current drops below 1/10th the ISET rammed value, the LP78071 terminates the charge cycle and ceases to provide any current through the BAT pin. In this state, all loads on the BAT pin must be supplied by the battery.

The LP78071 constantly monitors the BAT pin voltage in standby mode. If this voltage drops below the 4.05V recharge threshold (V_{RESTAT}), another charge cycle begins and current is once again supplied to the battery. To manually restart a charge cycle when in standby mode, the input voltage must be removed and reapplied, or the charger must be shut down and restarted using the ISET pin.

Charge Status Indicator (STAT)

The charge status output has two different states: strong pull-down (~10mA) and high impedance. The strong pull-down state indicates that the LP78071 is in a charge cycle. Once the charge cycle has terminated, the pin state is determined by under voltage lockout conditions. High impedance indicates that the LP78071 is in under voltage lockout mode: either V_{CC} is less than 100mV above the BAT pin voltage or insufficient voltage is applied to the V_{CC} pin.

Function	CHRG_B(pin3)	Voltage
Charging	Low	0.3V

Thermal Limiting

An internal thermal feedback loop reduces the ISET rammed charge current if the die temperature attempts to rise above a preset value of approximately 150°C. This feature protects the LP78071 from excessive temperature and allows the user to push the limits of the power handling capability of a given circuit board without risk of damaging the LP78071. The charge current can be set according to typical (not worst-case) ambient temperature with the assurance that the charger will automatically reduce the current in worst-case conditions.

Automatic Recharge

Once the charge cycle is terminated, the LP78071 continuously monitors the voltage on the BAT pin using a comparator with a 2ms filter time ($t_{RECHARGE}$). A charge cycle restarts when the battery voltage falls below 4.05V (which corresponds to approximately 80% to 90% battery capacity). This ensures that the battery is kept at or near a fully charged condition and eliminates the need for periodic charge cycle initiations. STAT output enters a strong pull-down state during recharge cycles.

oost Output voltage Setting

Set the output voltage by selecting the resistive voltage divider ratio. The voltage divider drops the output voltage to the 0.8V feedback voltage. Use a 100K resistor for R1 of the voltage divider. Determine the high-side resistor R2 by the equation:

$$Vout=(R2/R1+1) \times VFB$$

$$Vout=(R2/R1+1) \times 0.8V$$

Power Dissipation

The conditions that cause the LP78071 battery charger to reduce charge current through thermal feedback can be approximated by considering the total power dissipated in the IC. For high charge currents, the LP78071 power dissipation is approximately:

$$PD=(VIN-VBAT) \cdot IBAT$$

where PD is the power dissipated, VIN is the input supply voltage, VBAT is the battery voltage and IBAT is the charge current. The approximate ambient temperature at which the thermal feedback begins to protect the IC is:

$$TA=150℃-PD\theta JA$$

$$TA=150℃-(VIN-VBAT) \cdot IBAT \cdot \theta JA$$

LowPowerSemi 微源半導體

PCB Layout Considerations

For high frequency switching power supplies, the PCB layout is important step in system application design. In order to let IC achieve good regulation, high efficiency and stability, it is strongly recommended the power components(Inductor, input and output capacitor) should be placed as close as possible to chip. The set races should be wide and short. The feedback pin and then works of feedback and compensation should keep away from the power loops, and be shielded with a ground trace or plane to prevent noise coupling.

Packaging Information

ESOP-8

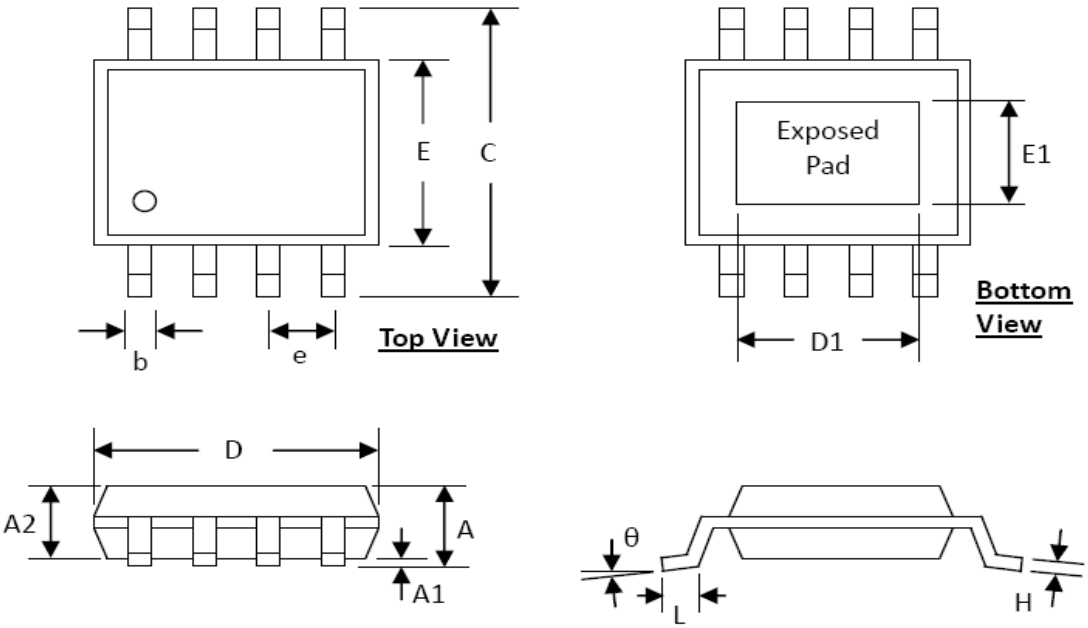

SYMBOLS	DIMENSION (MM)		DIMENSION (INCH)	
	MIN	MAX	MIN	MAX
A	1.30	1.70	0.051	0.067
A1	0.00	0.15	0.000	0.006
A2	1.25	1.52	0.049	0.060
b	0.33	0.51	0.013	0.020
C	5.80	6.20	0.228	0.244
D	4.80	5.00	0.189	0.197
D1	3.15	3.45	0.124	0.136
E	3.80	4.00	0.150	0.157
E1	2.26	2.56	0.089	0.101
e	1.27 BSC		0.050 BSC	
H	0.19	0.25	0.0075	0.0098
L	0.41	1.27	0.016	0.050
θ	0°	8°	0°	8°

TDFN-10

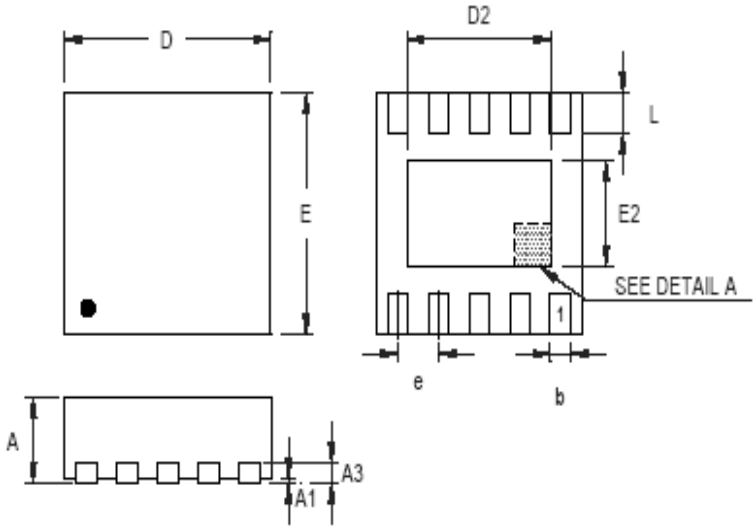

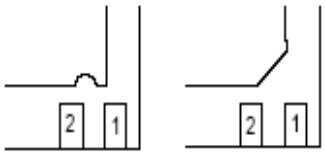

DETAIL A

Pin #1 ID and Tie Bar Mark Options

Note : The configuration of the Pin #1 identifier is optional, but must be located within the zone indicated.

Symbol	Dimensions In Millimeters		Dimensions In Inches	
	Min	Max	Min	Max
A	0.700	0.800	0.028	0.031
A1	0.000	0.050	0.000	0.002
A3	0.175	0.250	0.007	0.010
b	0.180	0.300	0.007	0.012
D	2.950	3.050	0.116	0.120
D2	2.300	2.650	0.091	0.104
E	2.950	3.050	0.116	0.120
E2	1.500	1.750	0.059	0.069
e	0.500		0.020	
L	0.350	0.450	0.014	0.018

W-Type 10L DFN 3x3 Package